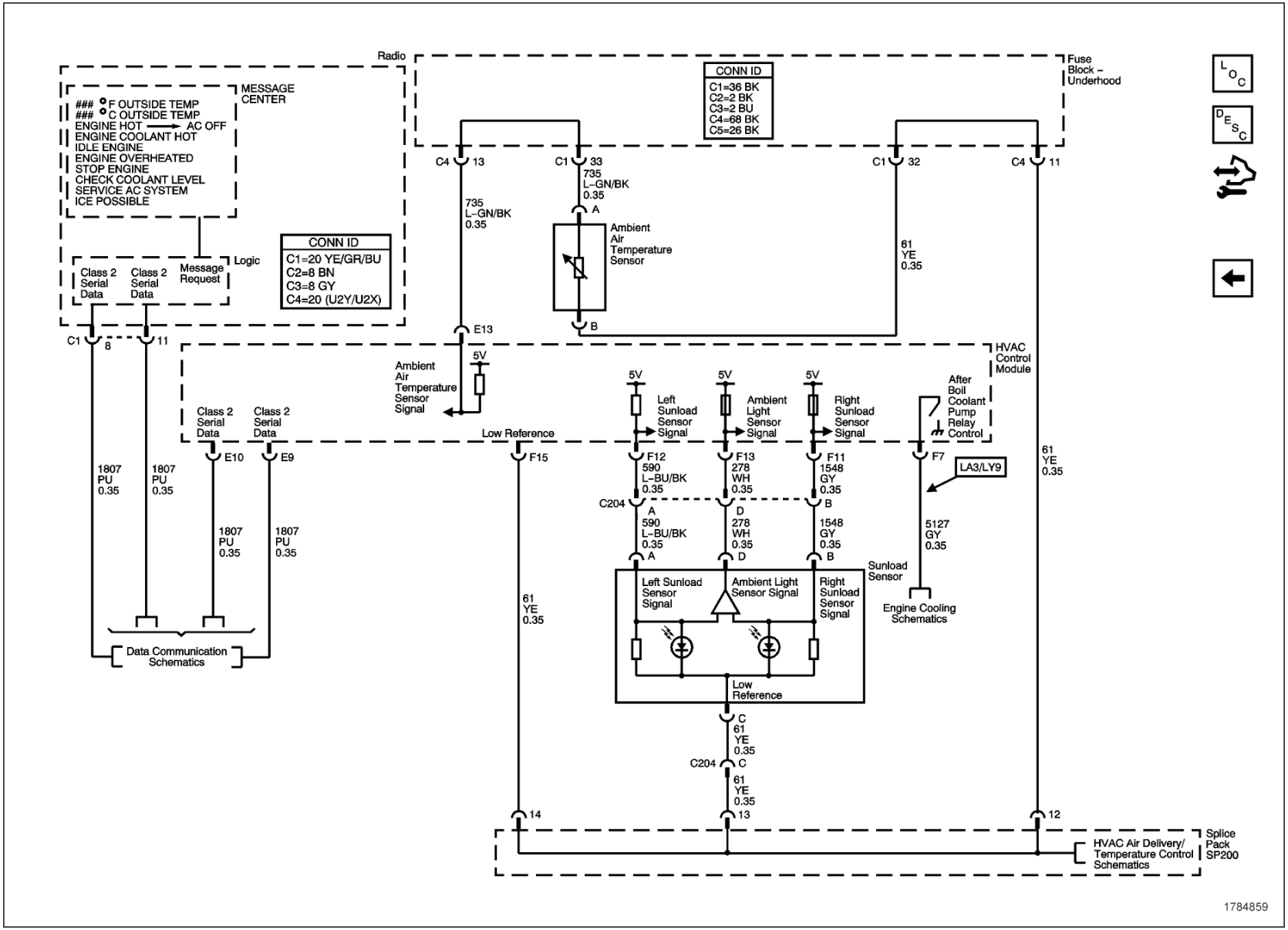
Radio
MESSAGE CENTER
°F OUTSIDE TEMP
°C OUTSIDE TEMP
ENGINE HOT → AC OFF
ENGINE COOLANT HOT
IDLE ENGINE
ENGINE OVERHEATED
STOP ENGINE
CHECK COOLANT LEVEL
SERVICE AC SYSTEM
ICE POSSIBLE
Logic
Class 2 Serial Data
Class 2 Serial Data
Message Request
CONN ID
C1=20 YE/GR/BU
C2=8 BN
C3=8 GY
C4=20 (U2Y/U2X)
Fuse Block – Underhood
CONN ID
C1=36 BK
C2=2 BK
C3=2 BU
C4=68 BK
C5=26 BK
C4 13
C1 33
735 L-GN/BK 0.35
735 L-GN/BK 0.35
A
Ambient Air Temperature Sensor
B
C1 32
C4 11
61 YE 0.35
E13
C1 8
11
HVAC Control Module
Ambient Air Temperature Sensor Signal
5V
Class 2 Serial Data
Class 2 Serial Data
E10
E9
Low Reference
F15
5V
Left Sunload Sensor Signal
5V
Ambient Light Sensor Signal
5V
Right Sunload Sensor Signal
After Boil Coolant Pump Relay Control
F7
LA3/LY9
F12 590 L-BU/BK 0.35
F13 278 WH 0.35
F11 1548 GY 0.35
C204
A 590 L-BU/BK 0.35
D 278 WH 0.35
B 1548 GY 0.35
5127 GY 0.35
1807 PU 0.35
1807 PU 0.35
1807 PU 0.35
1807 PU 0.35
61 YE 0.35
61 YE 0.35
Sunload Sensor
Left Sunload Sensor Signal
Ambient Light Sensor Signal
Right Sunload Sensor Signal
Engine Cooling Schematics
Low Reference
C 61 YE 0.35
C204 C
61 YE 0.35
14
13
12
Data Communication Schematics
HVAC Air Delivery/ Temperature Control Schematics
Splice Pack SP200
1784859